ENGINEERING PROJECT / IN DEVELOPMENT

Timing Belt Cutting Machine

Omar Shehab | Mechanical design in SolidWorks

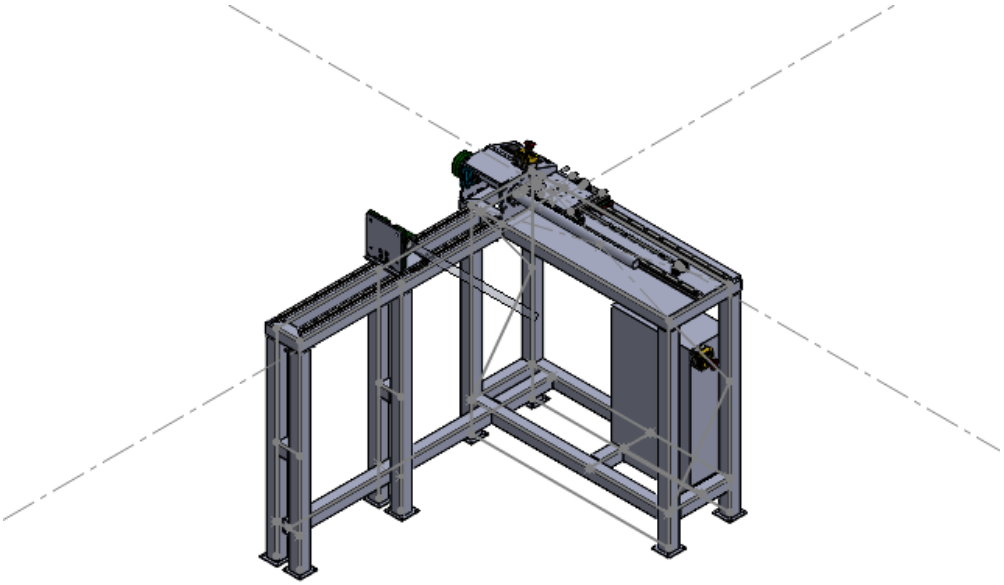

Original saved CAD preview. Design in progress; not a photograph of fabricated hardware.

Project overview

I am developing a timing belt cutting machine around a three-axis control concept. The mechanical design brings together the supporting frame, belt drive and tensioning arrangement, cutting head, and linear-motion interfaces.

The design study is informed by reverse engineering an existing German-developed machine. My work focuses on understanding its arrangement and developing the CAD assemblies, component interfaces and structural requirements for this project.

Design progress & next steps

Timing Belt Cutting Machine

Development so far

The SolidWorks files include machine assemblies, frame variants, belt-drive and tensioner assemblies, cutting-head components, shafts, pulleys and mounting parts. The design report also documents structural requirements and several views of the machine concept.

The material presented here records the CAD design work. The machine remains in development; cutting performance and commissioning results are not yet presented.

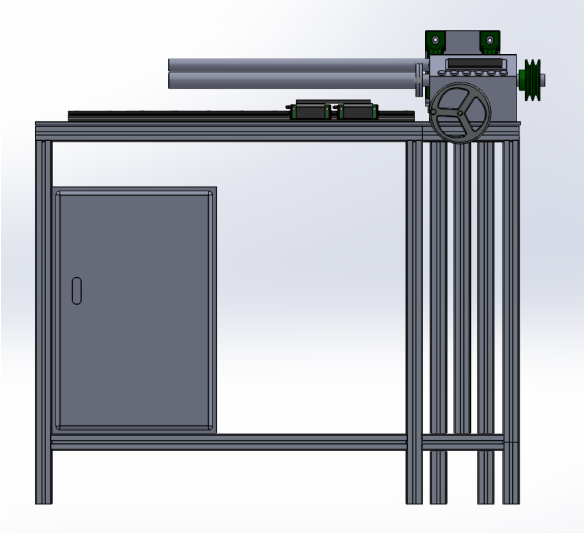

Front view from the design report; an earlier concept revision.

Next steps

Planned next steps are to consolidate the mechanical revision, review clearances and alignment, and complete fabrication details. Control integration, guarding and operating procedures will need to be developed and reviewed before commissioning. Cutting trials will then be needed to evaluate repeatability and cut quality.

Status note: This brief describes design work in progress. Dimensions, accuracy, safety compliance and production performance are not certified by this document.