ENGINEERING PROJECT / IN DEVELOPMENT

# CNC Machine Development

Omar Shehab | Mechanical design in SolidWorks

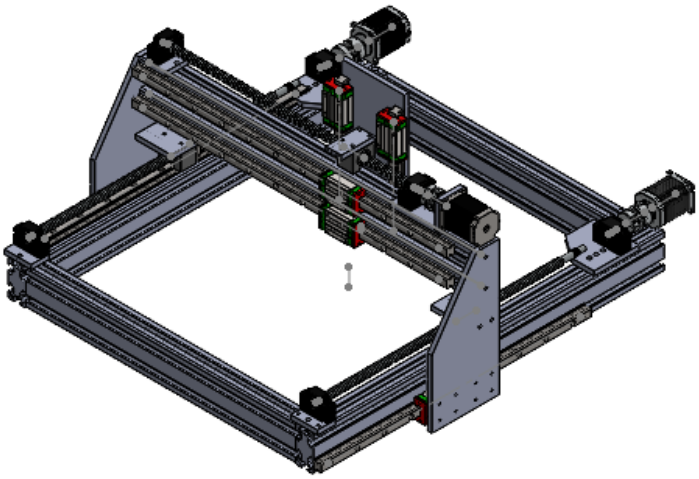

Original saved CAD preview. Design in progress; not a photograph of fabricated hardware.

## Project overview

I am developing a CNC machine with a focus on the mechanical structure and axis integration. The CAD assembly brings together a rectangular base, gantry bridge, linear guides, ball-screw drives and the mounting interfaces for the moving axes.

This project explores how the frame, motion components and custom mounting plates fit together as a complete mechanical system. The images show the design in progress, before a finished cutting setup is demonstrated.

# Design progress & next steps

CNC Machine Development

## Development so far

The SolidWorks project includes a main machine assembly, a base and axis subassembly, bridge and axis plates, bearing-support adapters, ball-screw mounting parts and stepper-motor interfaces.

The current assembly documents the mechanical layout. A finished spindle and workholding setup, machining accuracy and cutting trials are not demonstrated in these project materials.

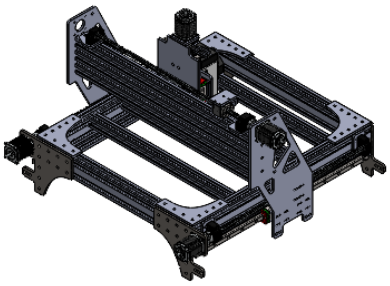

Base and axis subassembly: original saved SolidWorks preview.

## Next steps

Planned next steps are to review axis travel, clearances and alignment; refine the mounting plates; and define the spindle and workholding arrangement. Controls, limit switches, cable routing and guarding will need to be integrated before commissioning and measured motion tests.

Status note: This brief describes design work in progress. Dimensions, accuracy, safety compliance and production performance are not certified by this document.